Perfect 10 Hybrid Displays

P10 Backwall Graphic Dims

Product Name:	Perfect 10
Process:	HD
Material:	Poly Knit 9
Effective Date:	09/23/2014

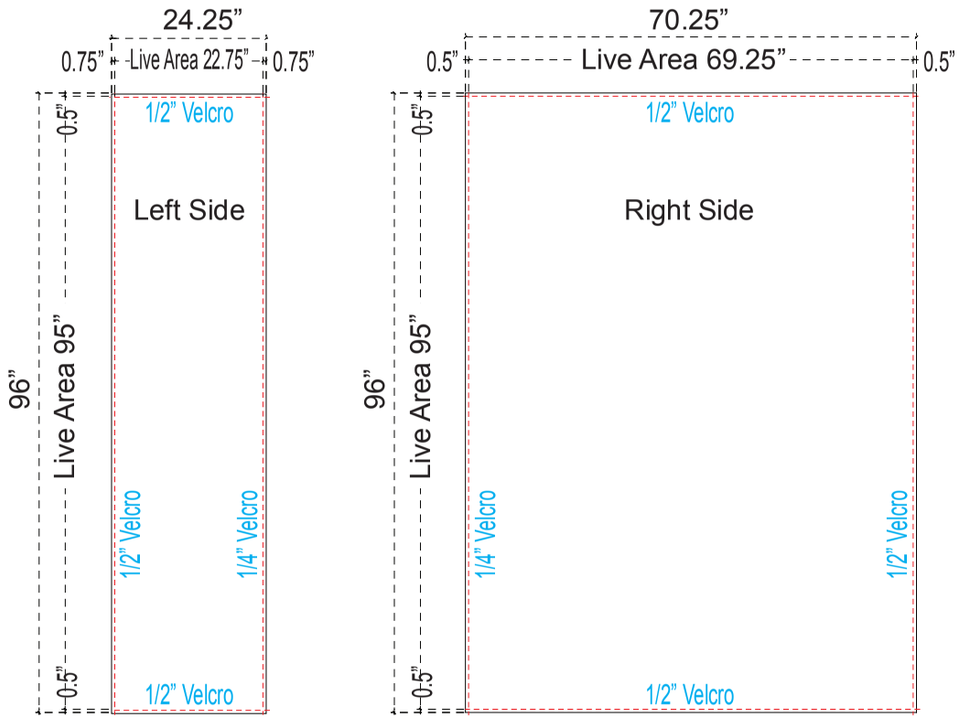

Live Area: 22.75”w x 95”h
with 0.5” bleed TOP
0.75“ bleed SIDES
Finished Size: 24.25”w x 96”h

Sew hook Velcro into front perimeter of graphic

Live Area: 69.25”w x 95”h
with 0.5” bleed around perimeter
Finished Size: 70.25”w x 96”h

Sew hook Velcro into front perimeter of graphic

NOTE: Graphic files must be @ 150 dpi Finished Size.
DO NOT send Flattened Files. Production can not manipulate the content, proportion or color of these files.

Example of PRINT/CUT SIZES:

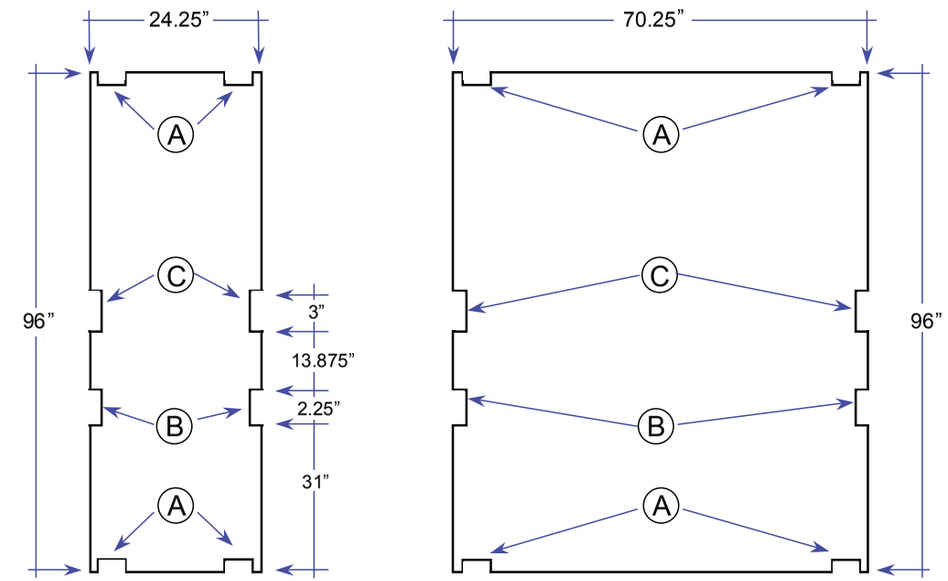

Finishing
Sew 1/2” Velcro to front perimeter of graphic
A - The 4 corner notches are cut 1/2” in from the edge and 1/4”h x 3/4”w
B - For the side notches - measure 31” up from the bottom of the graphic.
Notch is 2.25”h x 0.25”w.
C - Measure up an additional 13.875” from the top edge of the first notch.
Notch is 3”h x 0.25”w

NOTE: These dimensions are for graphic layout purposes.
Graphic needs to be cut and test fitted to P10 frame.

Perfect 10 Hybrid Displays

P10 Backwall Header Graphic Dims

NOTE: Graphic files must be @ 150 dpi Finished Size.

Product Name:	Perfect 10
Process:	Print on
Material:	1/4" Sintra
Effective Date:	03/12/2014

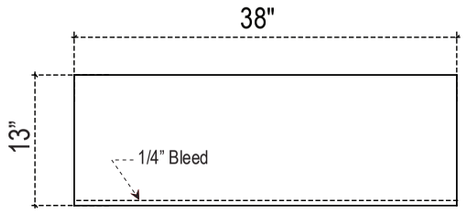

Rectangle Header

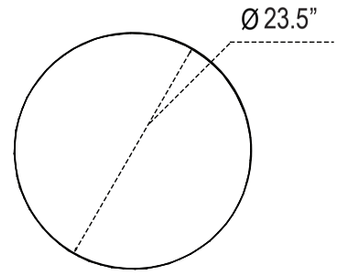

Round Header

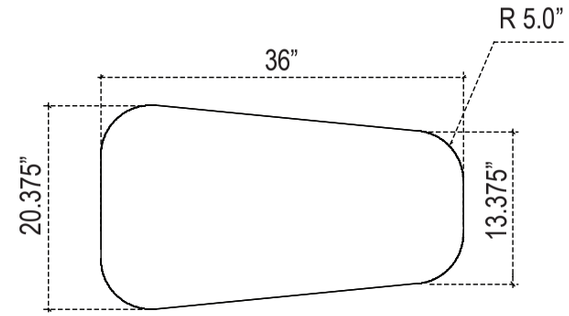

Trapezoid Header

A small portion of your graphic(s) may be hidden by P10 accessories, such as Headers. Please use these diagrams to position your graphics correctly.

Examples of P10 Backwall Left Side Graphic Dims with Headers

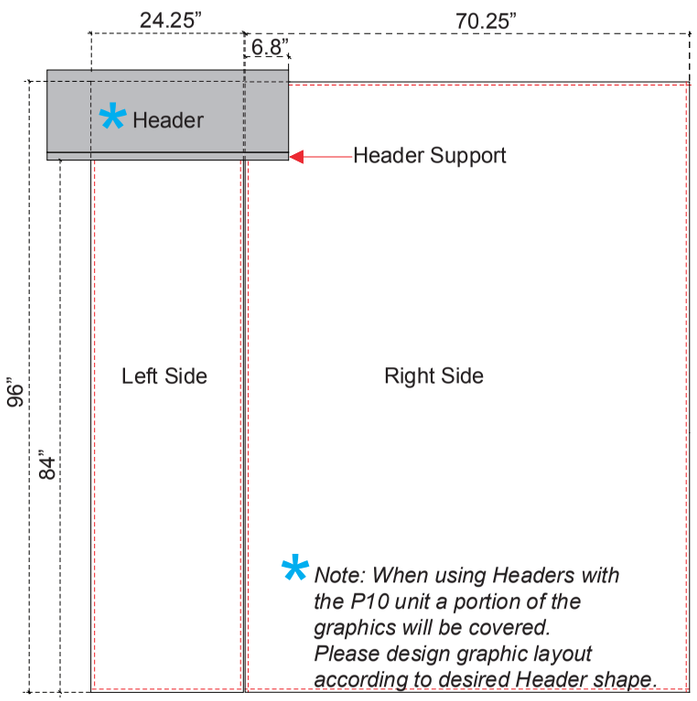

Note: When using Headers with the P10 unit a portion of the graphics will be covered. Please design graphic layout according to desired Header shape.

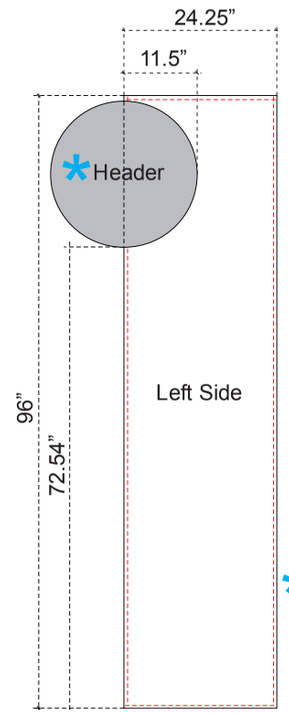

Note: When using Headers with the P10 unit a portion of the graphics will be covered. Please design graphic layout according to desired Header shape.

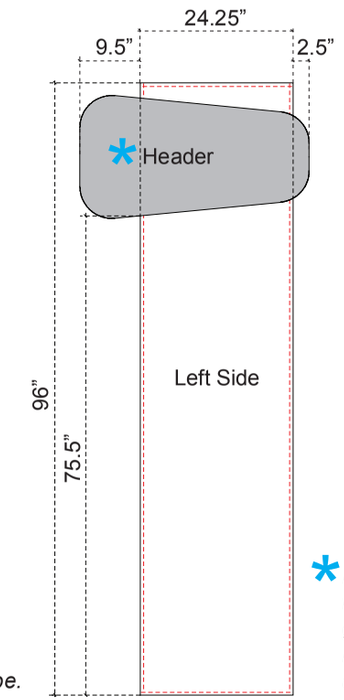

Note: When using Headers with the P10 unit a portion of the graphics will be covered. Please design graphic layout according to desired Header shape.

Note: Please refer to Backwall Graphic Dims page for complete instructions for Left Side fabric graphic.

Product Name: Perfect 10
Process: HD
Material: Poly Knit 9
Effective Date: 03/12/2014

A small portion of your graphic(s) may be hidden by P10 accessories, such as Monitors and Cubby Counters. Please use these diagrams to position your graphics correctly.

Perfect 10 Hybrid Displays

P10 Backwall Graphic Dims with Accessories

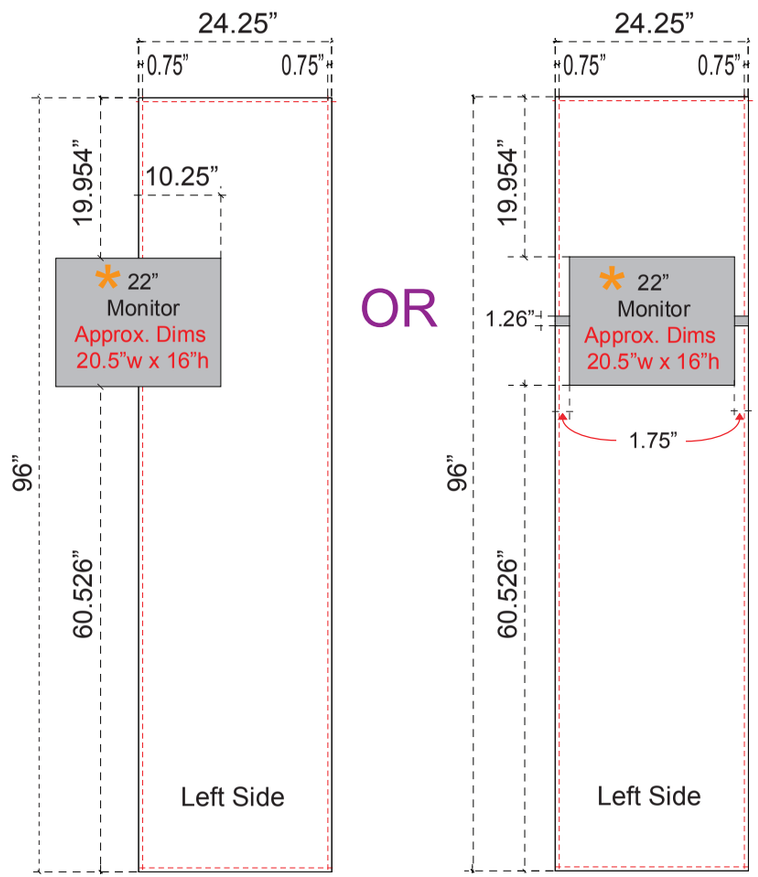

OR

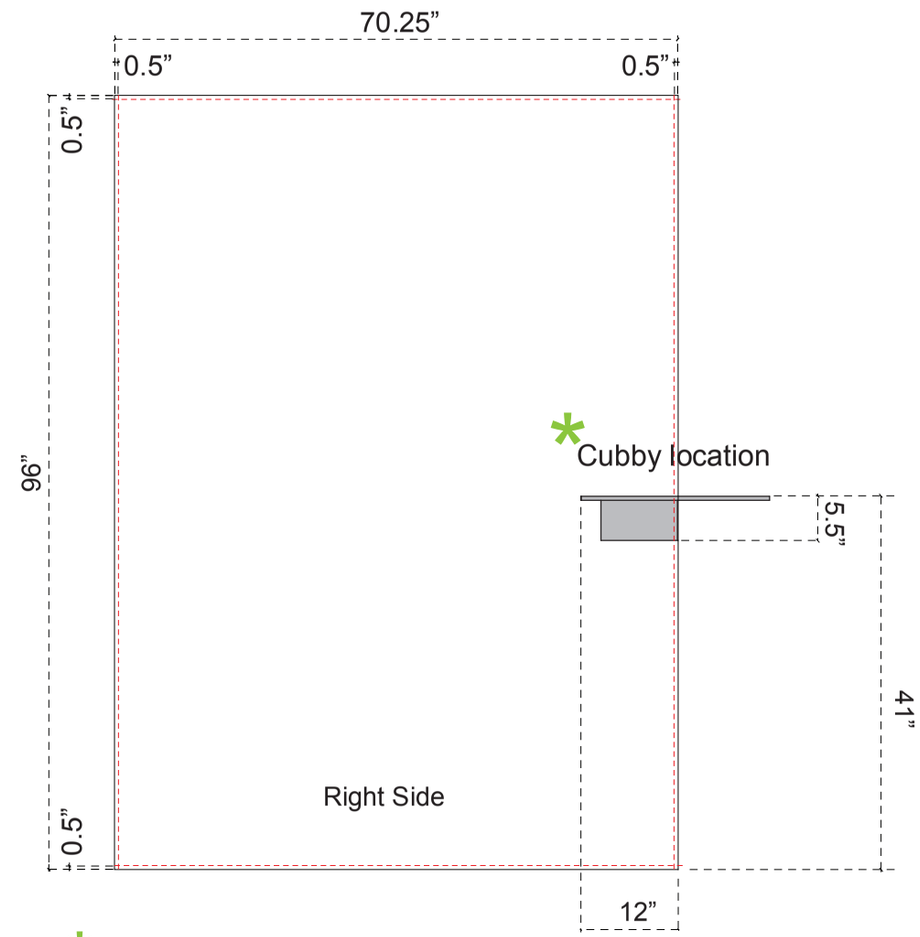

* *Note: When adding Monitors to the P10 unit, a portion of the graphic will be covered. Please design graphic layout according to desired Monitor Location.*

See Header Graphic Dims for header locations.

* *Note: When adding a Cubby to the P10 unit, a portion of the graphic will be covered.*

See Header Graphic Dims for header locations.